INTAKE AND EXHAUST

CONTENTS

SERVICE SPECIFICATION 2
SPECIAL TOOL 2
AIR CLEANER 3
INTAKE MANIFOLD 5
EXHAUST MANIFOLD 9
EXHAUST PIPE AND MAIN MUFFLER 12

SERVICE SPECIFICATION

Items	Standard value	Limit
Distortion of the intake manifold installation surface mm	0.15 or less	0.20

SPECIAL TOOL

Tool	Number	Name	Use
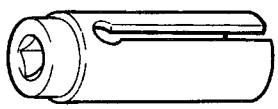	MD998770	Oxygen sensor wrench	Removal and installation of oxygen sensor

AIR CLEANER

REMOVAL AND INSTALLATION

<GDI>

Pre-removal and Post-installation Operation
Engine Cover Removal and Installation

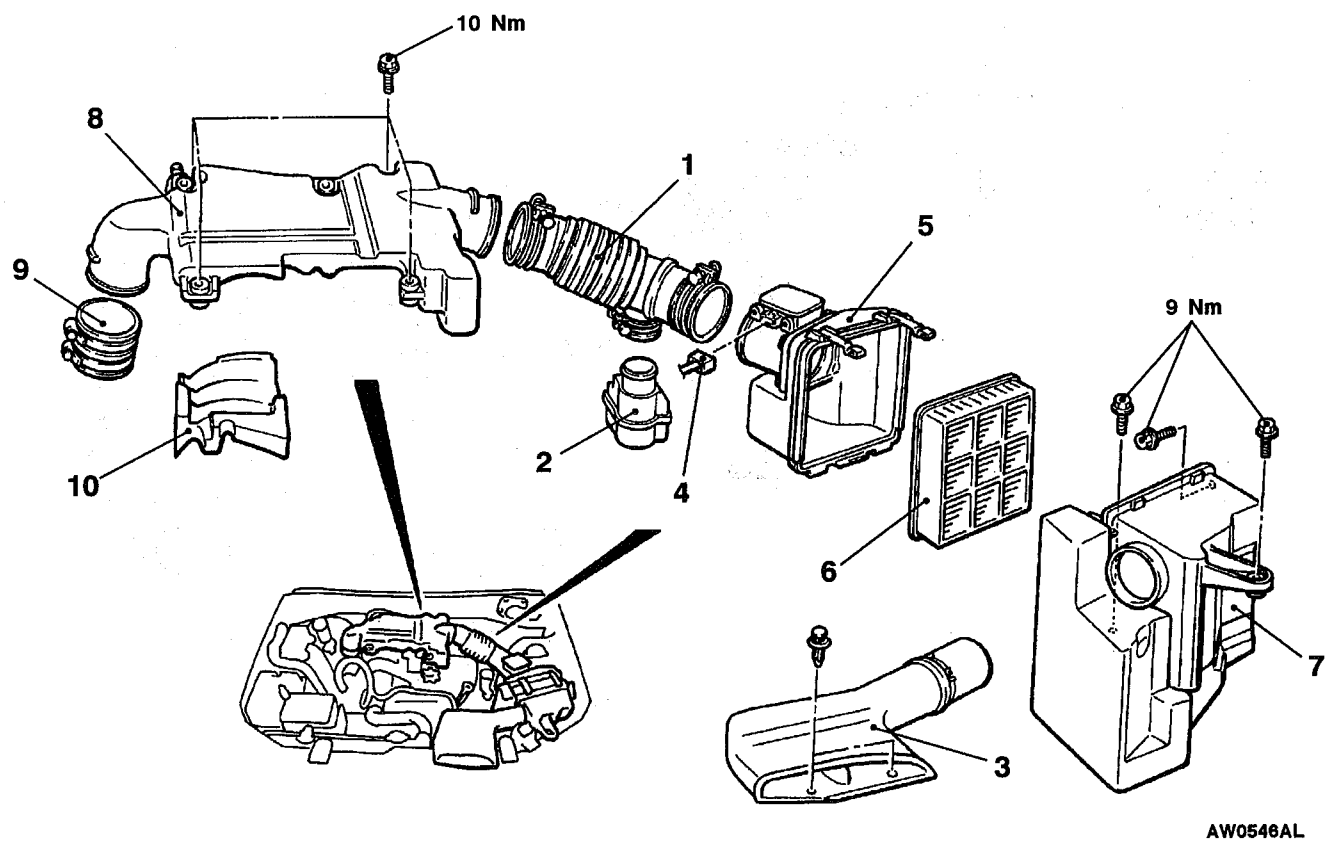

Air cleaner removal steps

1. Air intake hose
2. Resonator
3. Air duct
4. Air flow sensor connector connection
5. Air cleaner cover
6. Air cleaner element
7. Air cleaner

Resonance tank removal steps

8. Resonance tank
9. Air hose
10. Insulator

<MPI>

Pre-removal and Post-installation Operation
Engine Cover Removal and Installation

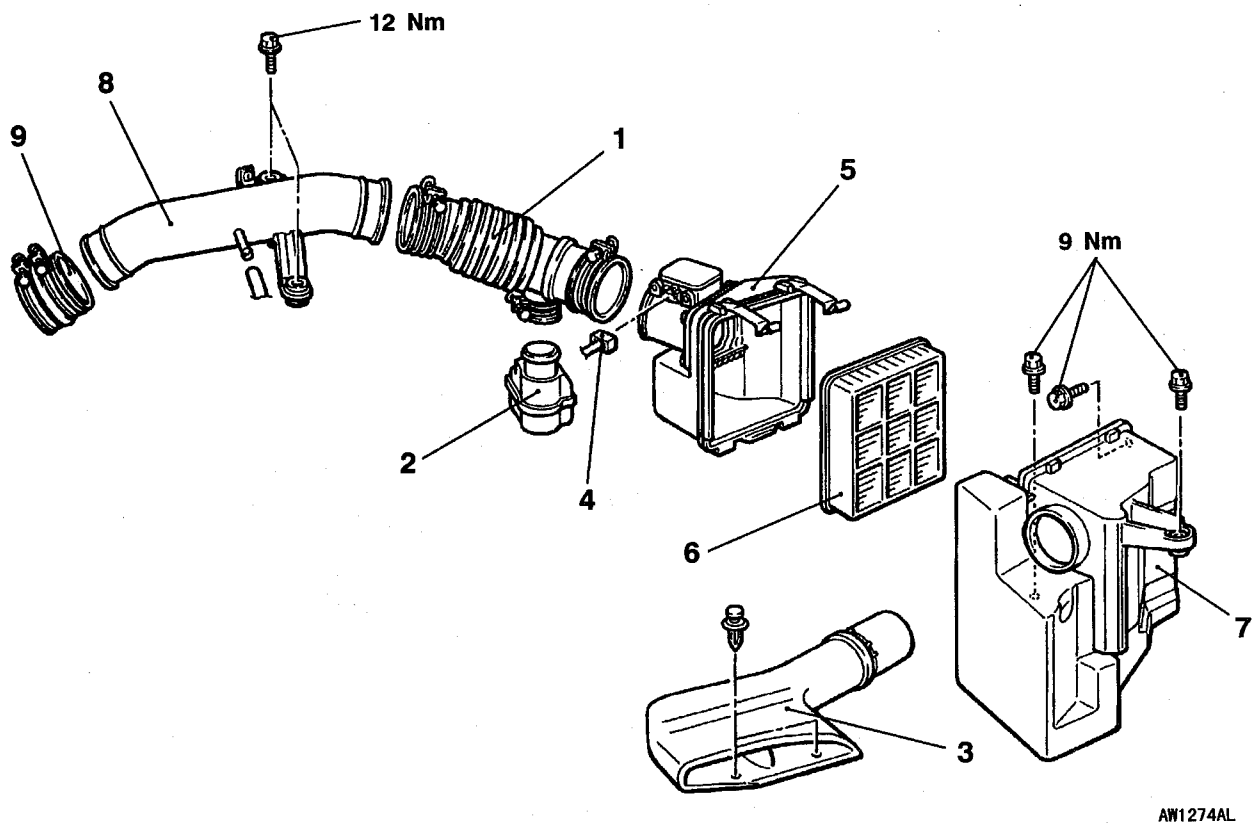

Air cleaner removal steps

1. Air intake hose
2. Resonator
3. Air duct
4. Air flow sensor connector connection
5. Air cleaner cover
6. Air cleaner element
7. Air cleaner
8. Air intake pipe
9. Air hose

INTAKE MANIFOLD

REMOVAL AND INSTALLATION

<GDI>

Pre-removal and Post-installation Operation
- Engine Coolant Draining and Supplying (Refer to GROUP 14 – On-vehicle Service.)
- Engine Cover and Under Cover Removal and Installation
- Resonance Tank Removal and Installation (Refer to P.15-3.)
- Ignition Coil Removal and Installation (Refer to GROUP 16.)
- Throttle Body Removal and Installation (Refer to GROUP 13A.)

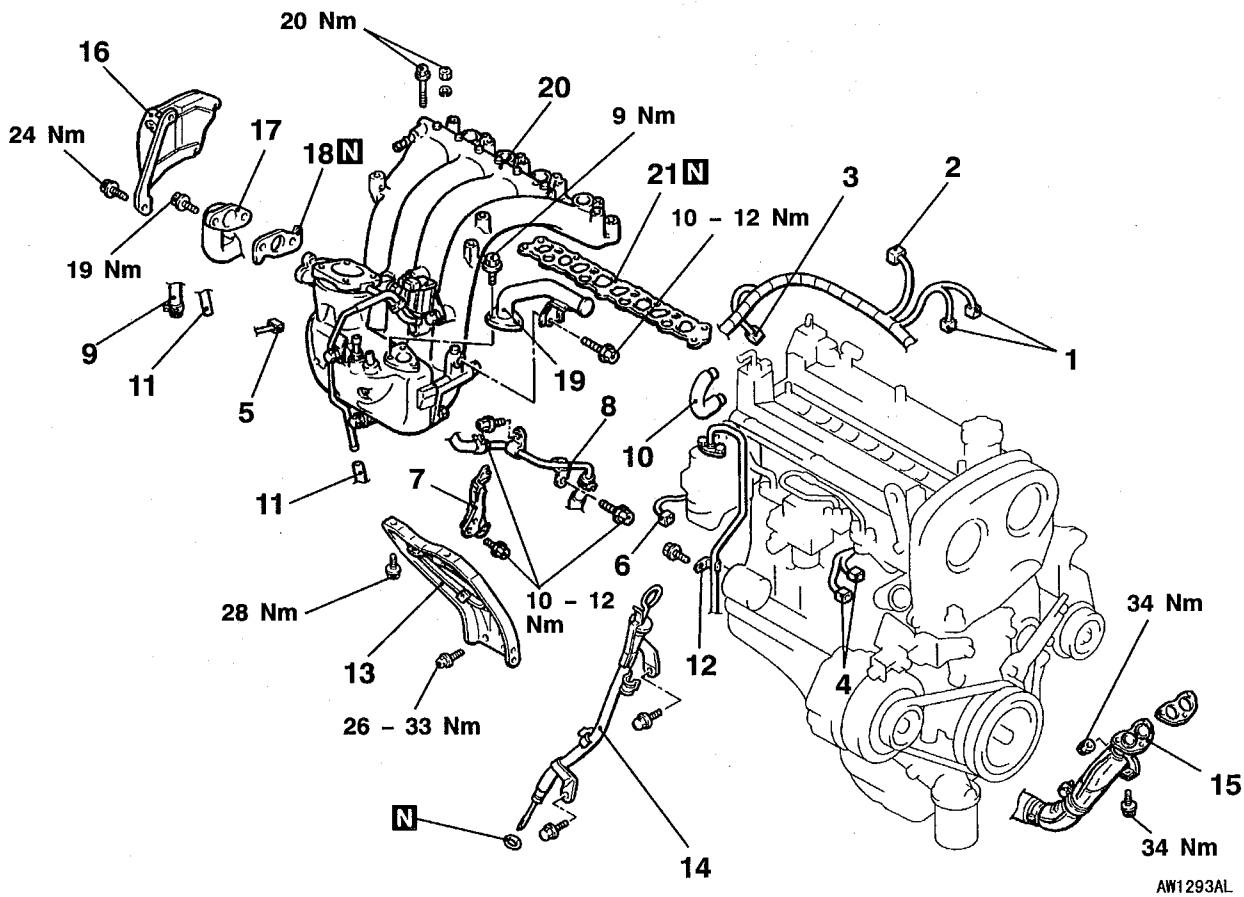

Removal steps

1. Engine coolant temperature sensor connector connection
2. Condenser connector connection
3. Camshaft position sensor connector connection
4. Injector harness connector connection
5. Purge control solenoid connector connection
6. EGR valve connector connection
7. Harness connector bracket
8. Water hose and pipe
9. Brake booster vacuum hose
10. PCV hose connection
11. Vacuum hose connection
12. Fuel hose clamp
13. Intake manifold stay
14. A/T fluid level gauge guide
15. Front exhaust pipe connection

◀A▶

16. Fuel pump protector
17. EGR valve support connection
18. Gasket
19. Branch tube
20. Intake manifold assembly
21. Intake manifold gasket

<4G1-MPI>

Pre-removal and Post-installation Operation
- Engine Coolant Draining and Supplying (Refer to GROUP 14 – On-vehicle Service.)
- Engine Cover and Under Cover Removal and Installation
- Air Cleaner Removal and Installation (Refer to P.15-4.)
- Throttle Body Removal and Installation (Refer to GROUP 13B.)
- Water Outlet Fitting and Thermostat Case Assembly Removal and Installation (Refer to GROUP 14.)

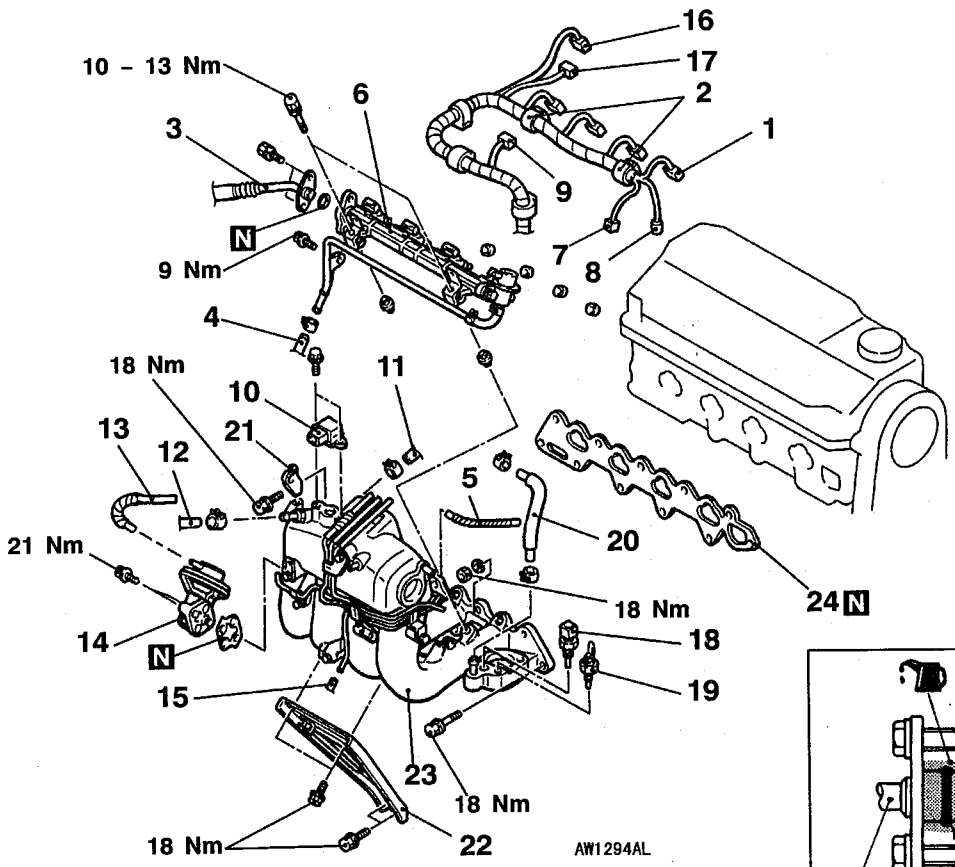

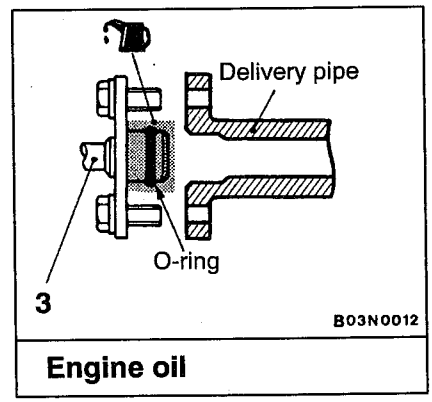

Engine oil

Removal steps

1. Injector harness connector connection
2. Engine harness clamp connection
▶A◀ 3. Fuel pressure hose
4. Fuel return hose
5. Vacuum hose
◀B▶ 6. Delivery pipe, injector and fuel pressure regulator assembly
7. Purge solenoid valve connector connection
8. EGR solenoid valve connector connection
9. Boost sensor connector connection
10. Boost sensor
11. PCV hose connection
12. Boost sensor vacuum hose
13. EGR valve vacuum hose
14. EGR valve
15. Vacuum hose
16. Camshaft position sensor connector connection
17. Oxygen sensor connector connection
18. Engine coolant temperature sensor
19. Engine coolant temperature gauge
20. Water hose
21. Intake manifold stay
22. Engine hanger
23. Intake manifold assembly
24. Intake manifold gasket

<4G9-MPI>

Pre-removal and Post-installation Operation
- Engine Coolant Draining and Supplying (Refer to GROUP 14 – On-vehicle Service.)
- Engine Cover and Under Cover Removal and Installation
- Air Cleaner Removal and Installation (Refer to P.15-4.)
- Throttle Body Removal and Installation (Refer to GROUP 13C.)

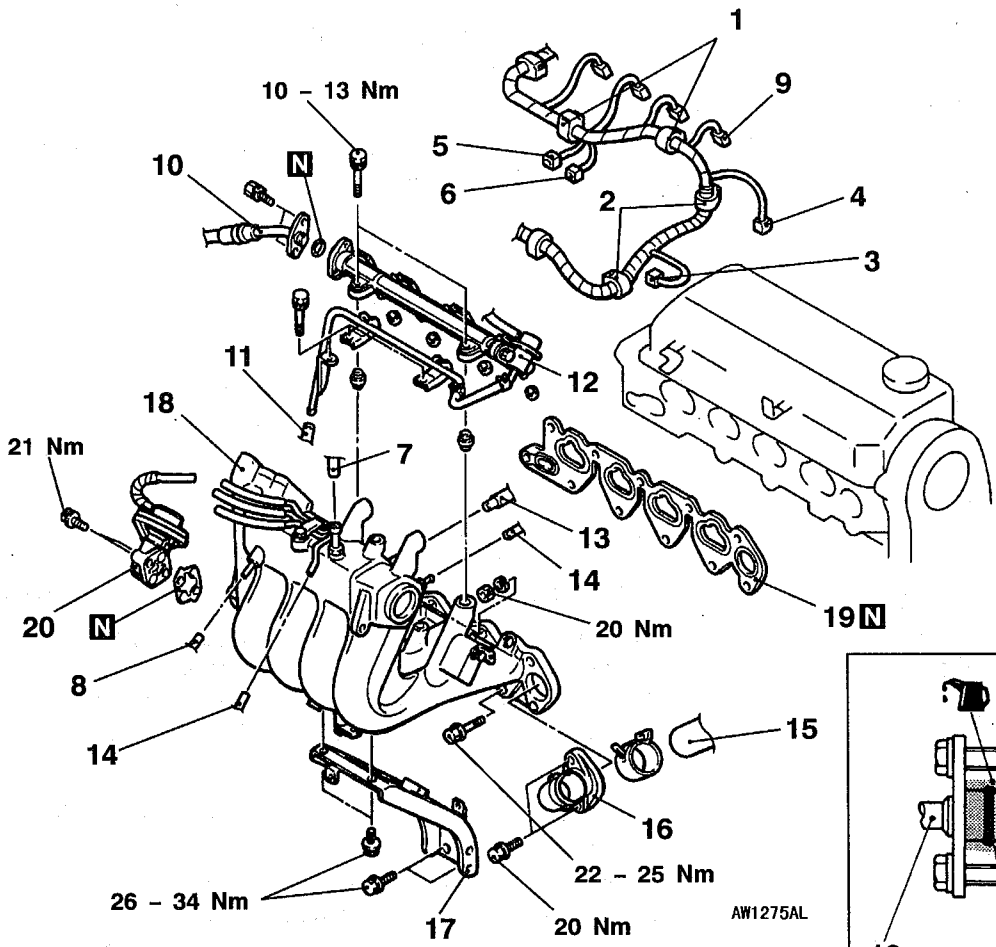

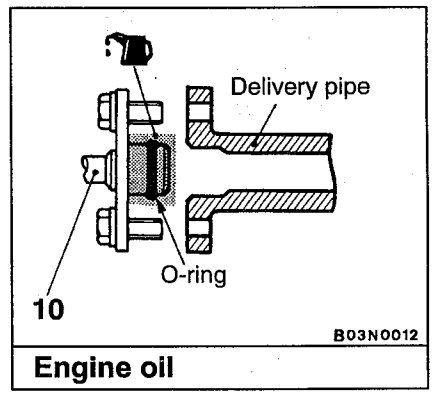

Engine oil

Removal steps

1. Engine harness clamp connection
2. Intake manifold harness clamp connection
3. Detonation sensor harness connector connection
4. Crank angle sensor harness connector connection
5. Purge control solenoid connector connection
6. EGR valve connector connection
7. Brake booster vacuum hose connection
8. Intake manifold vacuum hose connection
9. Injector harness connector connection

▶A◀ 10. Fuel pressure hose

11. Return hose

◀B▶ 12. Delivery pipe, injector and fuel pressure regulator assembly

13. PCV hose connection
14. Vacuum hose connection
15. Radiator upper hose
16. Water outlet fitting
17. Intake manifold stay
18. Intake manifold assembly
19. Intake manifold gasket
20. EGR valve

REMOVAL SERVICE POINT

◀A▶ FUEL PUMP PROTECTOR REMOVAL

Lift up the transmission with a jack to create clearance between the engine and the front deck, and remove the fuel pump protector.

◀B▶ DELIVERY PIPE, INJECTOR AND FUEL PRESSURE REGULATOR ASSEMBLY REMOVAL

Remove the delivery pipe (with the injectors and fuel pressure regulator attached to it).

Caution
Care must be taken, when removing the delivery pipe, not to drop the injector.

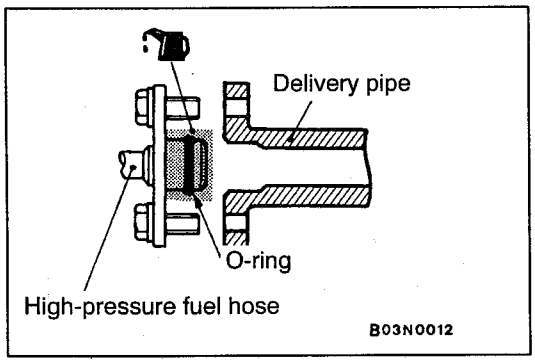

INSTALLATION SERVICE POINT

▶A◀ HIGH-PRESSURE FUEL HOSE INSTALLATION

1. When connecting the high-pressure fuel hose to the delivery pipe, apply a small amount of new engine oil to the O-ring and then insert the high-pressure fuel hose, being careful not to damage the O-ring.

   Caution
   Be careful not to let any engine oil get into the delivery pipe.

2. While turning the high-pressure fuel hose to the left and right, install it to the delivery pipe.
3. Check to be sure that the high-pressure fuel hose turns smoothly.
   If it does not turn smoothly, the O-ring may be trapped, remove the high-pressure fuel hose and then re-insert it into the delivery pipe and check once again.

INSPECTION

Check the following points; replace the part if a problem is found.

INTAKE MANIFOLD CHECK

1. Check for damage or cracking of any part.
2. Check for obstruction of the negative pressure (vacuum) outlet port, and for obstruction of the water passage or gas passage.
3. Using a straight edge and thickness gauge, check for distortion of the cylinder head installation surface.

   Standard value: 0.15 mm or less

   Limit: 0.20 mm

EXHAUST MANIFOLD

REMOVAL AND INSTALLATION

<GDI>

Pre-removal and Post-installation Operation
- Engine Cover and Under Cover Removal and Installation
- Air Cleaner Removal and Installation (Refer to P.15-3.)

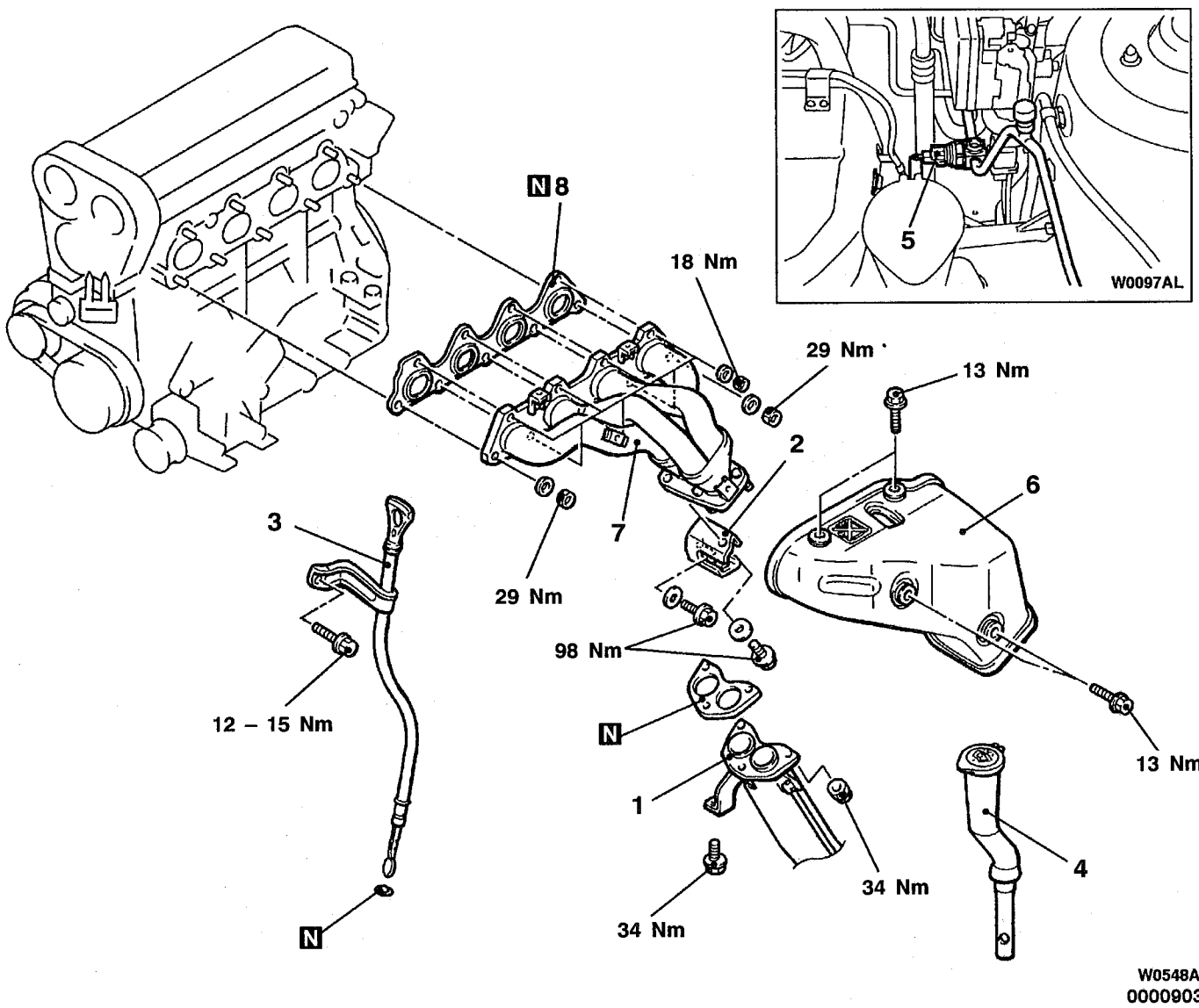

Removal steps

1. Front exhaust pipe connection
2. Exhaust manifold bracket
3. Engine oil level gauge guide
4. Washer tank filler tube
5. A/C pressure switch connector connection
6. Exhaust manifold cover
7. Exhaust manifold
8. Exhaust manifold gasket

<4G1-MPI>

Pre-removal and Post-installation Operation
- Engine Cover and Under Cover Removal and Installation
- Air Cleaner Removal and Installation (Refer to P.15-4.)

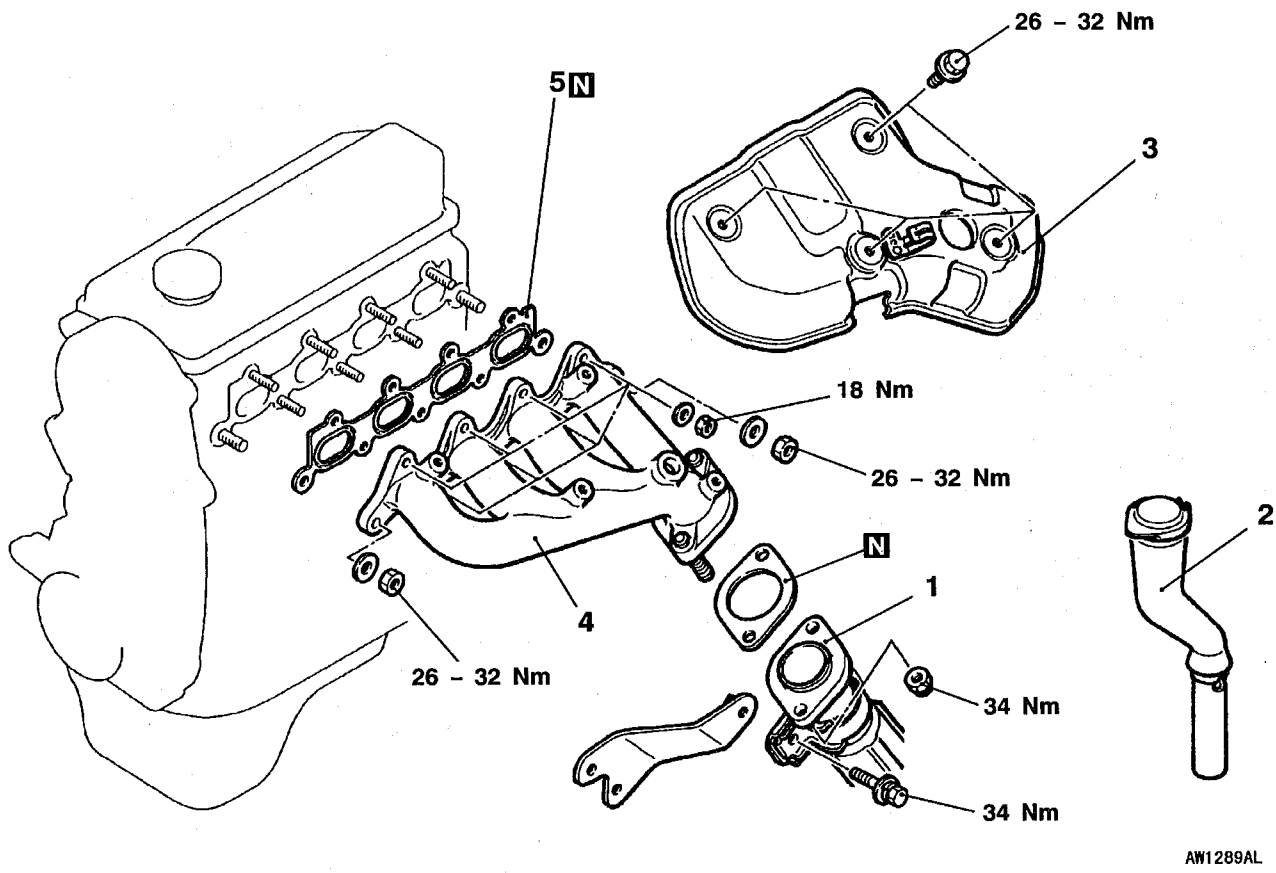

Removal steps
1. Front exhaust pipe connection
2. Washer tank filler tube
3. Exhaust manifold cover
4. Exhaust manifold
5. Exhaust manifold gasket

<4G9-MPI>

Pre-removal and Post-installation Operation
- Engine Cover and Under Cover Removal and Installation
- Air Cleaner Removal and Installation (Refer to P.15-4.)

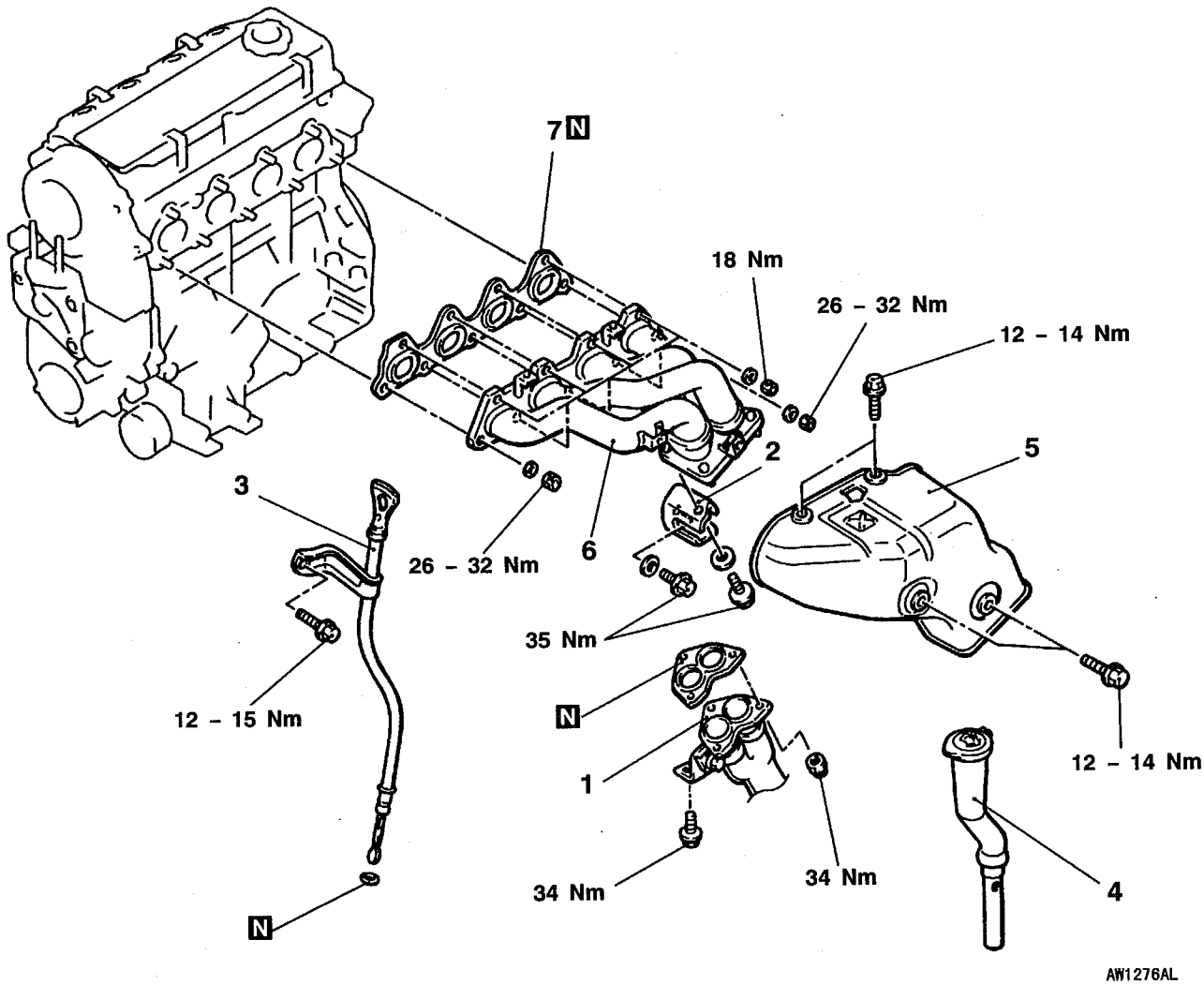

Removal steps

1. Front exhaust pipe connection
2. Exhaust manifold bracket
3. Engine oil level gauge guide
4. Washer tank filler tube
5. Exhaust manifold cover
6. Exhaust manifold
7. Exhaust manifold gasket

EXHAUST PIPE AND MAIN MUFFLER

REMOVAL AND INSTALLATION

Pre-removal and Post-installation Operation
Engine Cover and Under Cover Removal and Installation

<GDI>

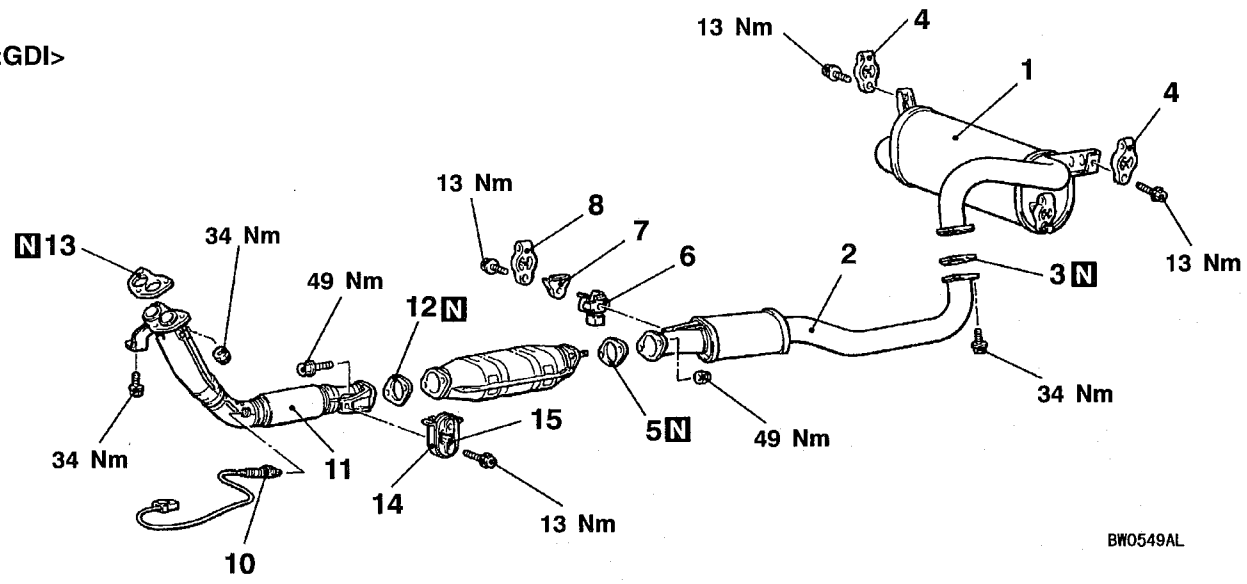

<4G1-MPI (Vehicle without catalytic converter)>

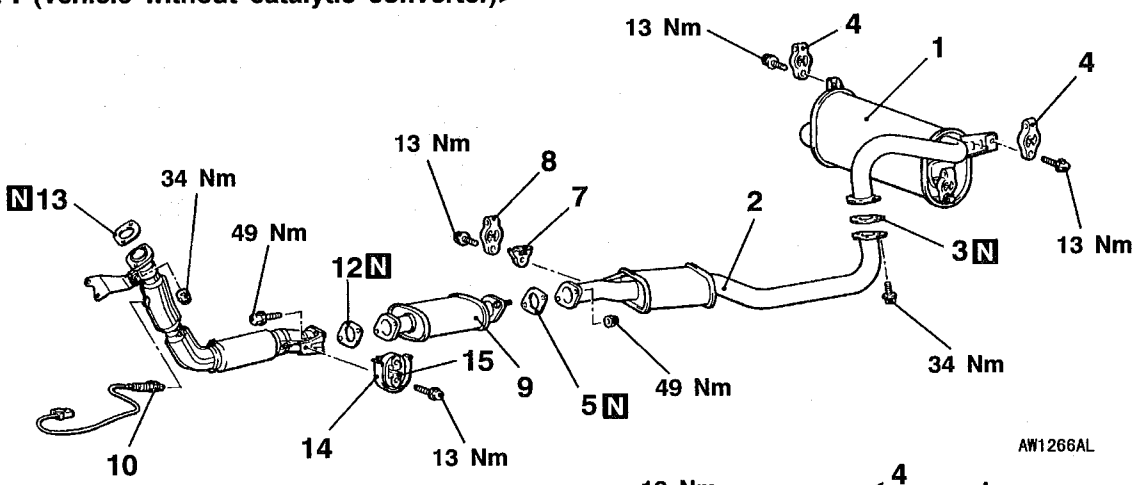

<4G9-MPI (Vehicle without catalytic converter)>

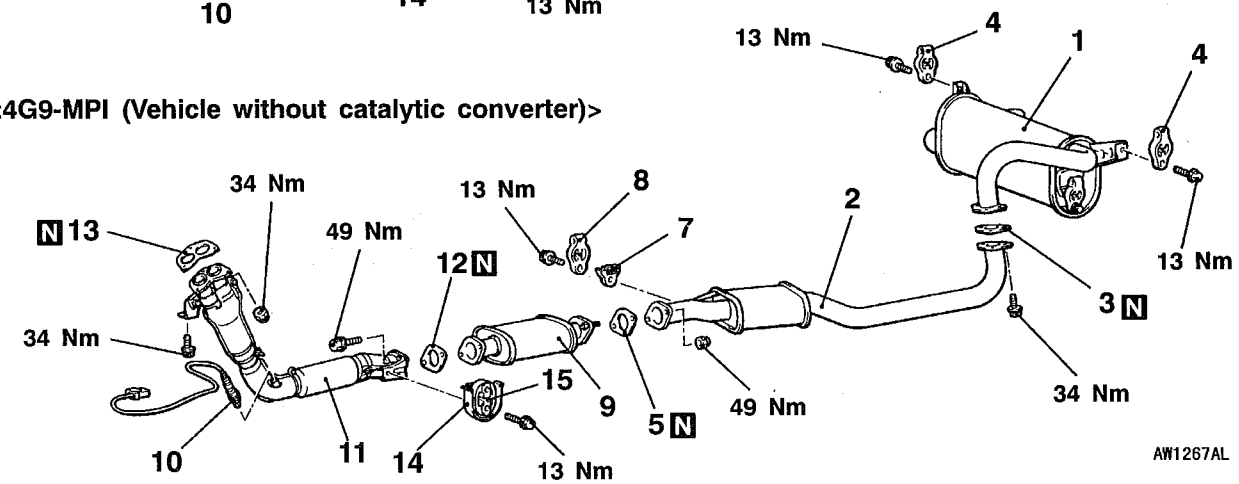

<4G1-MPI (Vehicle with catalytic converter)>

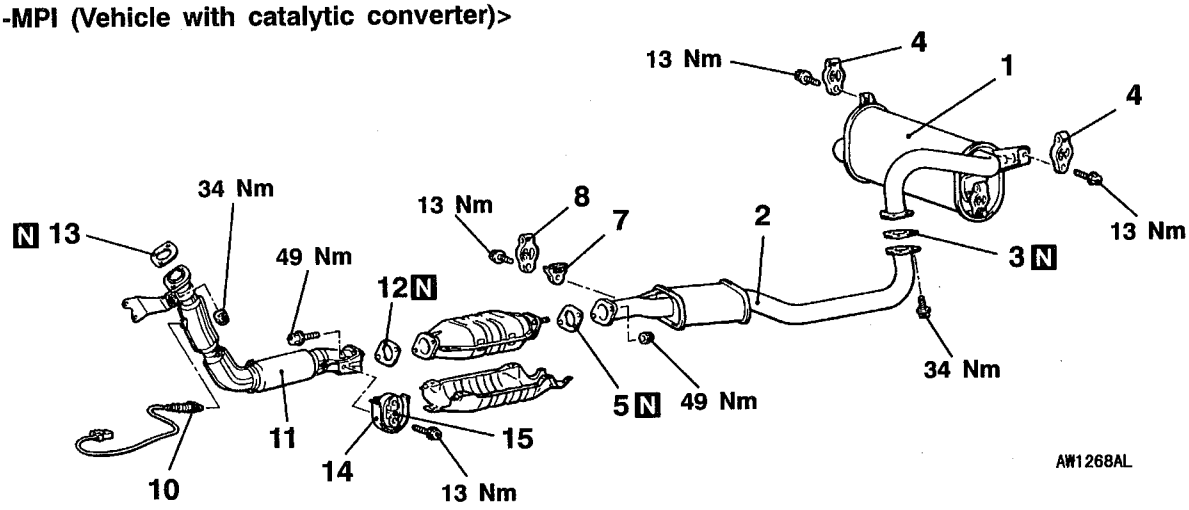

<4G9-MPI (Vehicle with catalytic converter)>

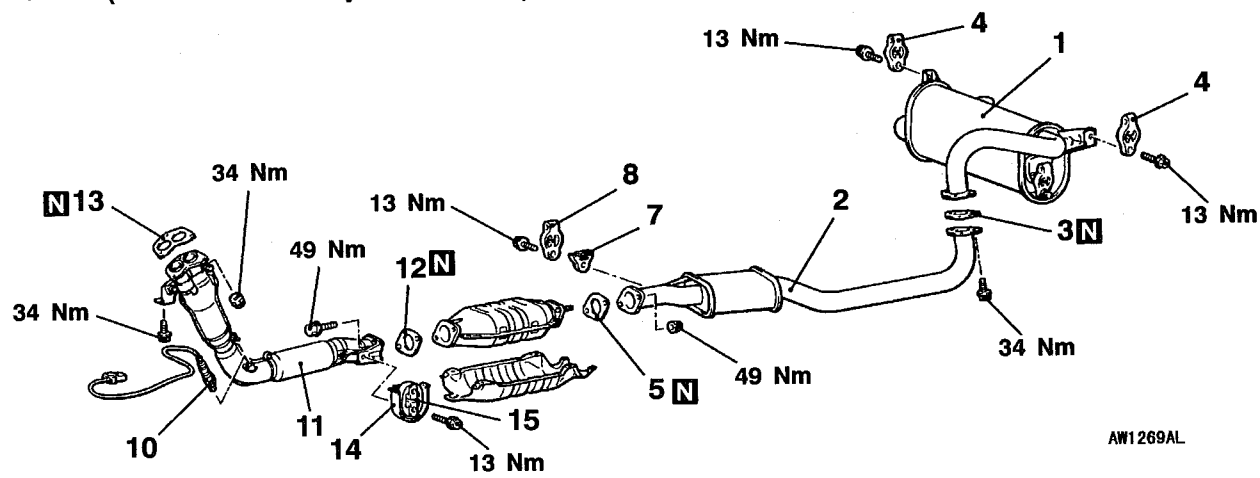

Main muffler removal steps

1. Main muffler
3. Gasket
4. Hanger

Center exhaust pipe removal steps

2. Center exhaust pipe
3. Gasket
5. Gasket
6. Damper
7. Protector
8. Hanger

Pre-muffler removal steps

9. Pre-muffler
12. Gasket

Center exhaust pipe removal steps

◀A▶ ▶A◀ 10. Oxygen sensor
11. Front exhaust pipe
12. Gasket
13. Gasket
14. Heat protector
15. Hanger

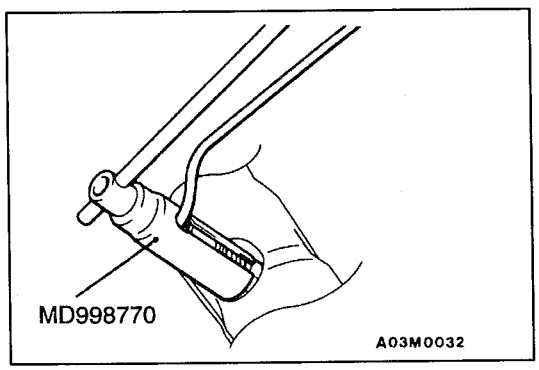

REMOVAL SERVICE POINT

◀A▶ OXYGEN SENSOR REMOVAL

INSTALLATION SERVICE POINT

▶A◀ OXYGEN SENSOR INSTALLATION

NOTES